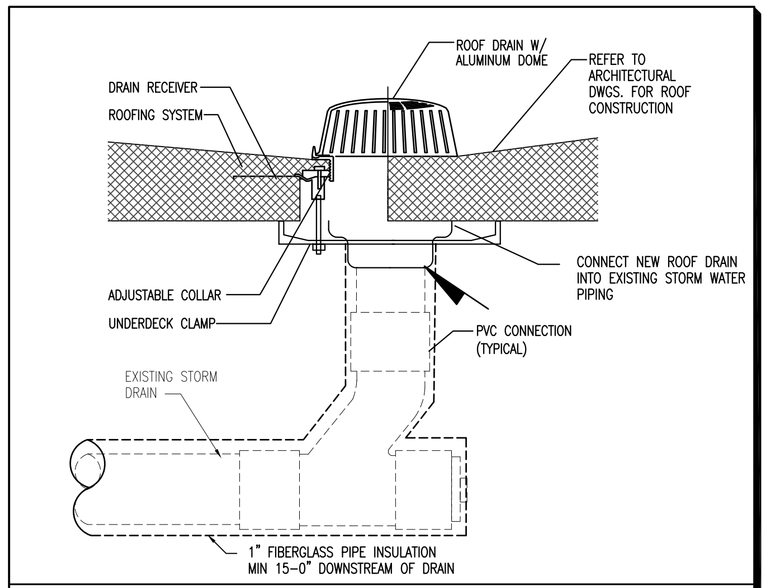

ROOF DRAIN DETAIL

NOT TO SCALE

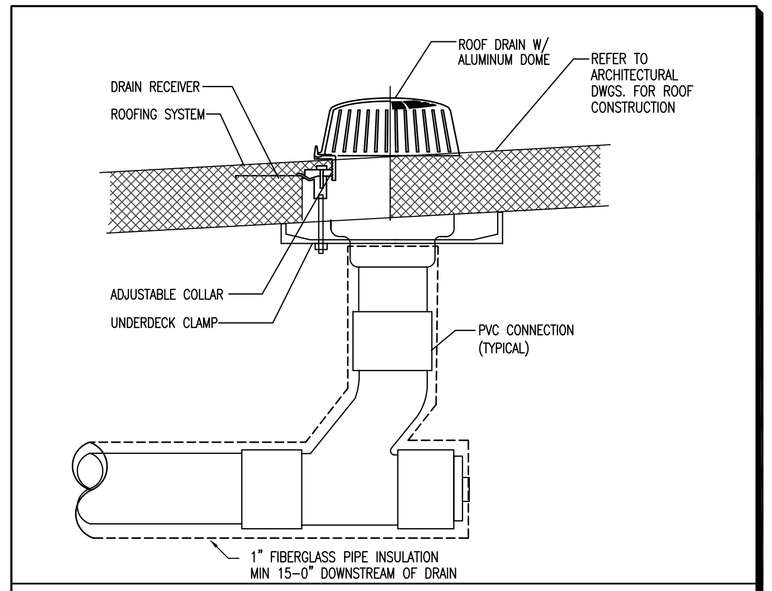

OVERFLOW ROOF DRAIN DETAIL

NOT TO SCALE

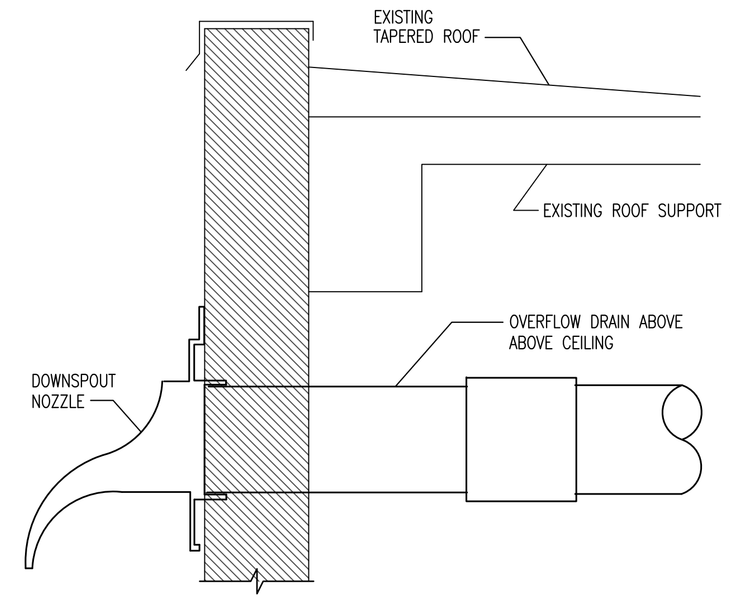

DOWNSPOUT NOZZLE DETAIL

NOT TO SCALE

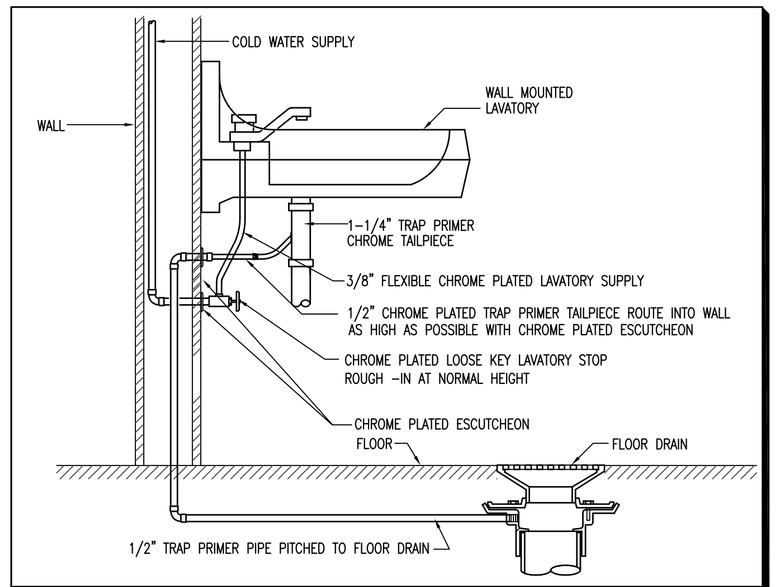

TRAP PRIMER TAILPIECE DETAIL

NOT TO SCALE

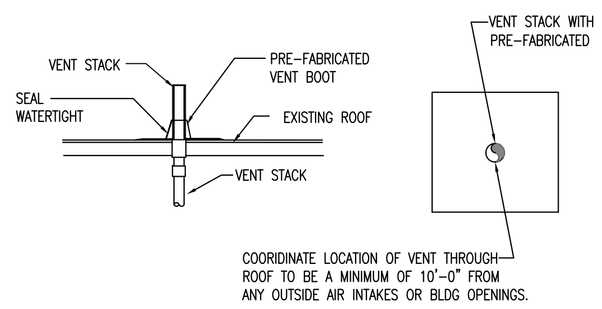

NOTES:
1. CONTRACTOR MAY PROVIDE A PRE-FABRICATED VENT BOOT AS AN APPROVED EQUAL.
2. SEAL PENETRATION THROUGH ROOF WATERTIGHT.

VENT THROUGH ROOF DETAIL

NOT TO SCALE

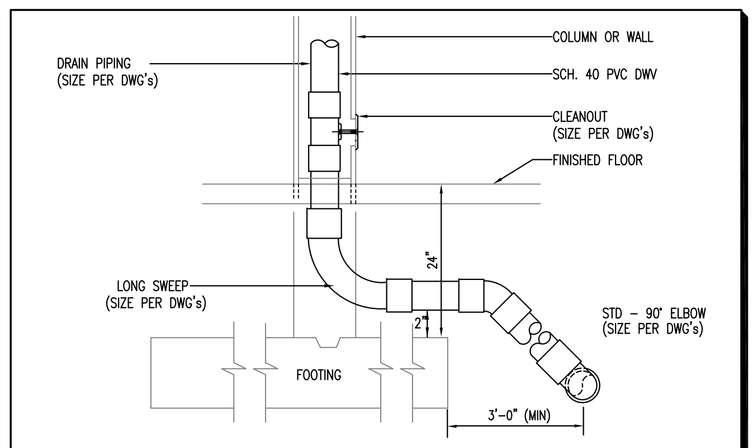

DRAINAGE PIPING DETAIL

NOT TO SCALE

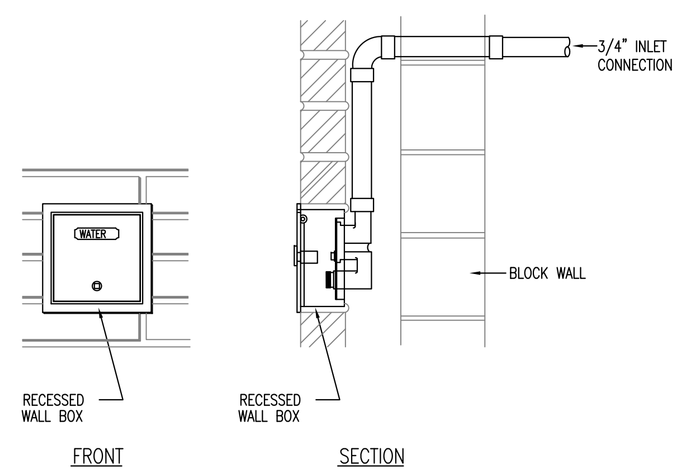

EXTERIOR NARROW WALL HYDRANT DETAIL

NOT TO SCALE

RULE 1: BRANCH LINES OF 20 FEET OR LESS.
THE HAMMER ARRESTOR SHOULD BE PLACED AT THE END OF THE BRANCH LINE BETWEEN THE LAST TWO FIXTURES.

RULE 2: BRANCH LINES OVER 20 FEET.
AN ADDITIONAL HAMMER ARRESTOR (Y) SHOULD BE PLACED AS SHOWN (BELOW). THE ADDITIONAL UNIT PLACED AT THE MIDPOINT OF THE RUN LONGER THAN 20 FEET. THE SUM OF THE FIXTURE UNIT RATINGS OF (X) AND (Y) COMBINED, SHOULD BE EQUAL TO OR GREATER THAN THE DEMAND OF ALL BRANCHES.

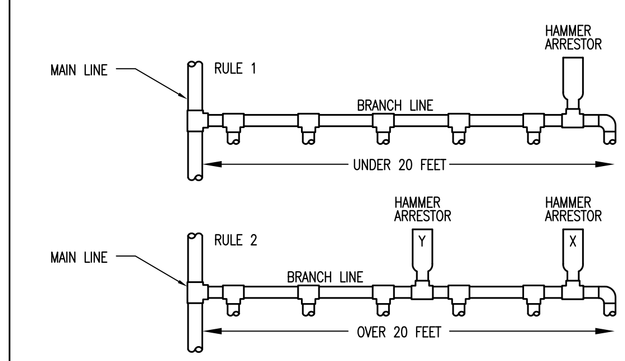

WATER HAMMER ARRESTOR DETAIL

NOT TO SCALE

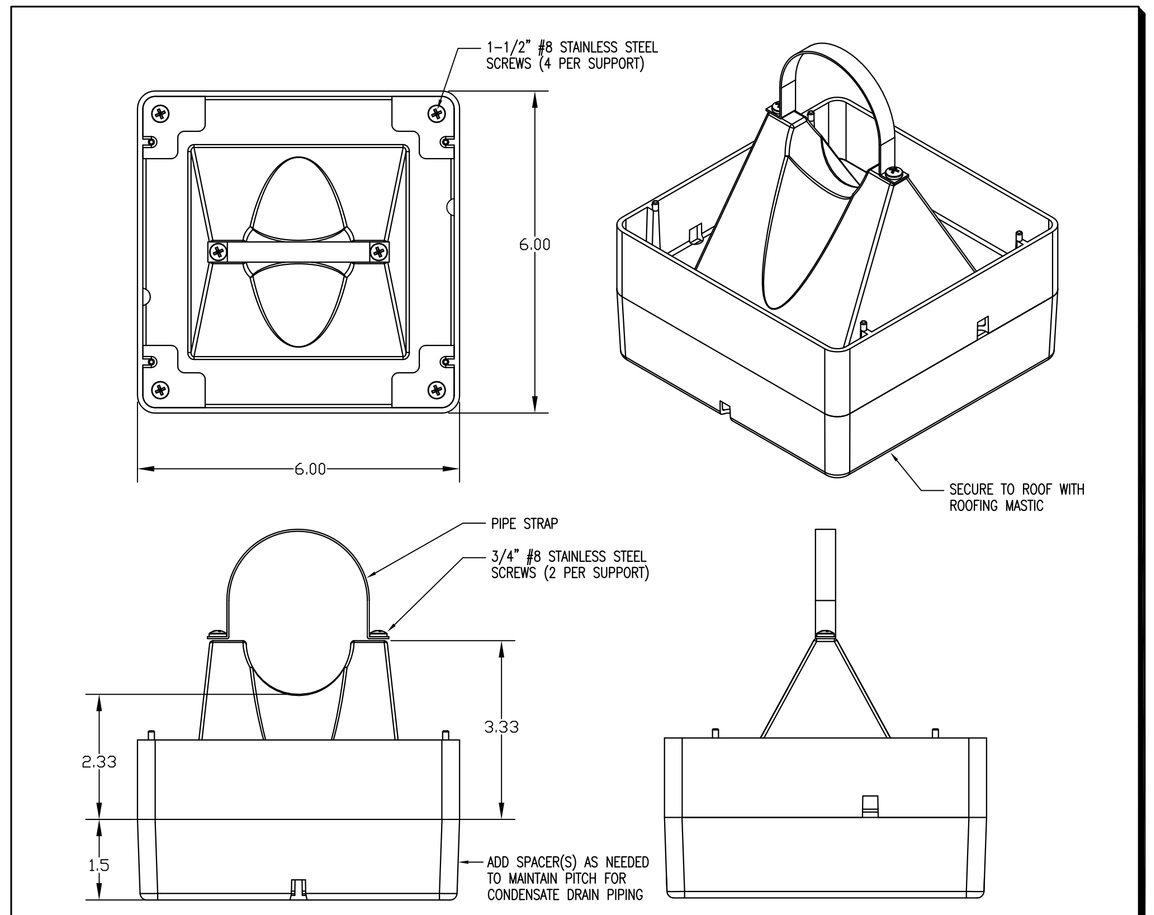

CONDENSATE/GAS PIPE ROOF STAND

NOT TO SCALE

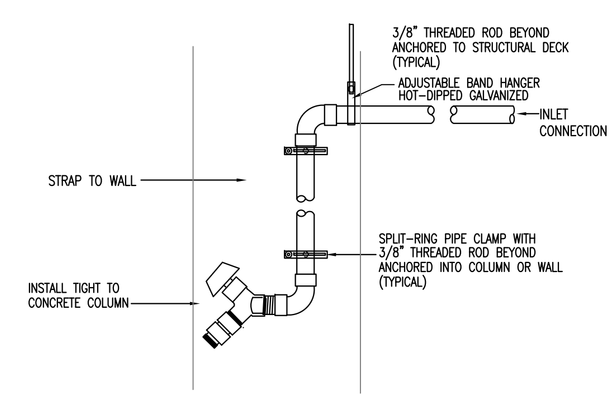

INTERIOR HOSE BIBB DETAIL

NOT TO SCALE

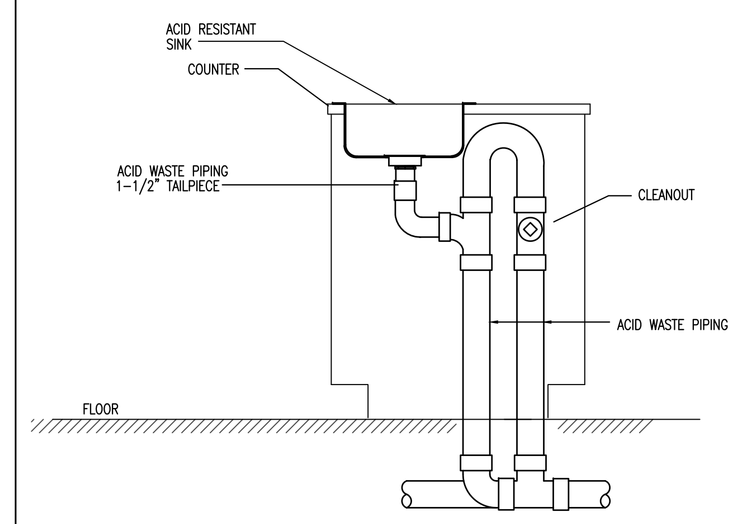

TYPICAL SCIENCE ROOM CUP SINK DETAIL

NOT TO SCALE

bdg ARCHITECTS
1211 North Franklin Street
Tampa, FL 33602
P: (813) 323 - 9233
F: (813) 323 - 9238
www.bdgsai.com
Lic. #: AA - 0003590
W: www.bdgsai.com

THIS DRAWING AND ANY REPRODUCTIONS ARE THE PROPERTY OF THE ARCHITECTS, AND MAY NOT BE REPRODUCED, PUBLISHED, MODIFIED, OR USED IN ANY WAY WITHOUT EXPRESS WRITTEN NOTICE FROM THE ARCHITECT. DRAWINGS AND ANY REPRODUCTIONS OF THEM SHALL NOT BE SCALED OFF FOR ANY PURPOSE. ANY DISCREPANCIES IN THE DRAWINGS SHALL BE REFERRED IMMEDIATELY TO THE ARCHITECT FOR CLARIFICATION PRIOR TO CONTINUING WITH THE WORK. COMMENCEMENT WITH THE WORK SHALL BE CONSIDERED. ACCEPTANCE OF THE INTEGRITY THE DRAWINGS. THE CONTRACTOR IS RESPONSIBLE FOR THE COORDINATION, SCHEDULING, AND CONFORMANCE OF THE WORK OF INVOLVED TRADES. COPYRIGHT 2008, BDG ARCHITECTS, INC. ALL RIGHTS RESERVED.

Imagine International Academy

2144 S. Cobb Drive
Smyrna, GA. 30080

217 N. McDonough St., Suite 200 Decatur, GA. 30030

Oakhurst Realty Partners

REV.	DATE & COMMENTS	BY

JOB NUMBER :	08033
DATE :	MARCH 20, 2009
DRAWN BY :	RC
SCALE:	AS NOTED
DRAWING:	PLUMBING DETAILS

SHEET NUMBER
P-16

KPI ENGINEERING, INC.
PROFESSIONAL ENGINEERS
3203 QUEEN PALM DRIVE
TAMPA, FLORIDA 33619
PHONE (813) 241-6488
FAX (813) 241-6498
Board of Professional Engineers - License # 27336

DEAN S. KENYON, P.E.
GA. LIC. No. 032813

Signature Date